THIS DRAWING IS UNPUBLISHED. RELEASED FOR PUBLICATION -,- .
© COPYRIGHT - BY TYCO ELECTRONICS CORPORATION. ALL RIGHTS RESERVED.

LOC	DIST
CM	0

REVISIONS

P	LTR	DESCRIPTION	DATE	DWN	APVD
	N	ECO-07-012897	26JUN07	KW	DB
	N1	REVISED PER ECO-09-023313	13OCT09	KK	AEG

1. MATERIAL:
   CONNECTOR: POLYESTER UL94V-0 (RED).
   CONTACTS: 0.30 [.012] THK COPPER ALLOY.
2. CONTACT ACCEPT #22 AWG WIRE WITH 2.41 [.095] MAXIMUM INSULATION DIAMETER.
3. CONNECTOR MATES WITH 1.57±0.20[.062±.008] THICK PC BOARD.
4. HOUSING FEATURES: CLOSED END, STANDARD MOUTH WITH MOUNTING EARS.
5. CONTACT FINISH: BRIGHT TIN-LEAD 0.00203[.000080] MIN THK.
6. CONTACT FINISH: MATTE WHISKER MITIGATED TIN 0.00203[.000080] MIN THICKNESS OVER NICKEL UNDERPLATE.
7. OBSOLETE PARTS: OBSOLETE CIS STREAMLINING PER D.RENAUD/D.SINISI

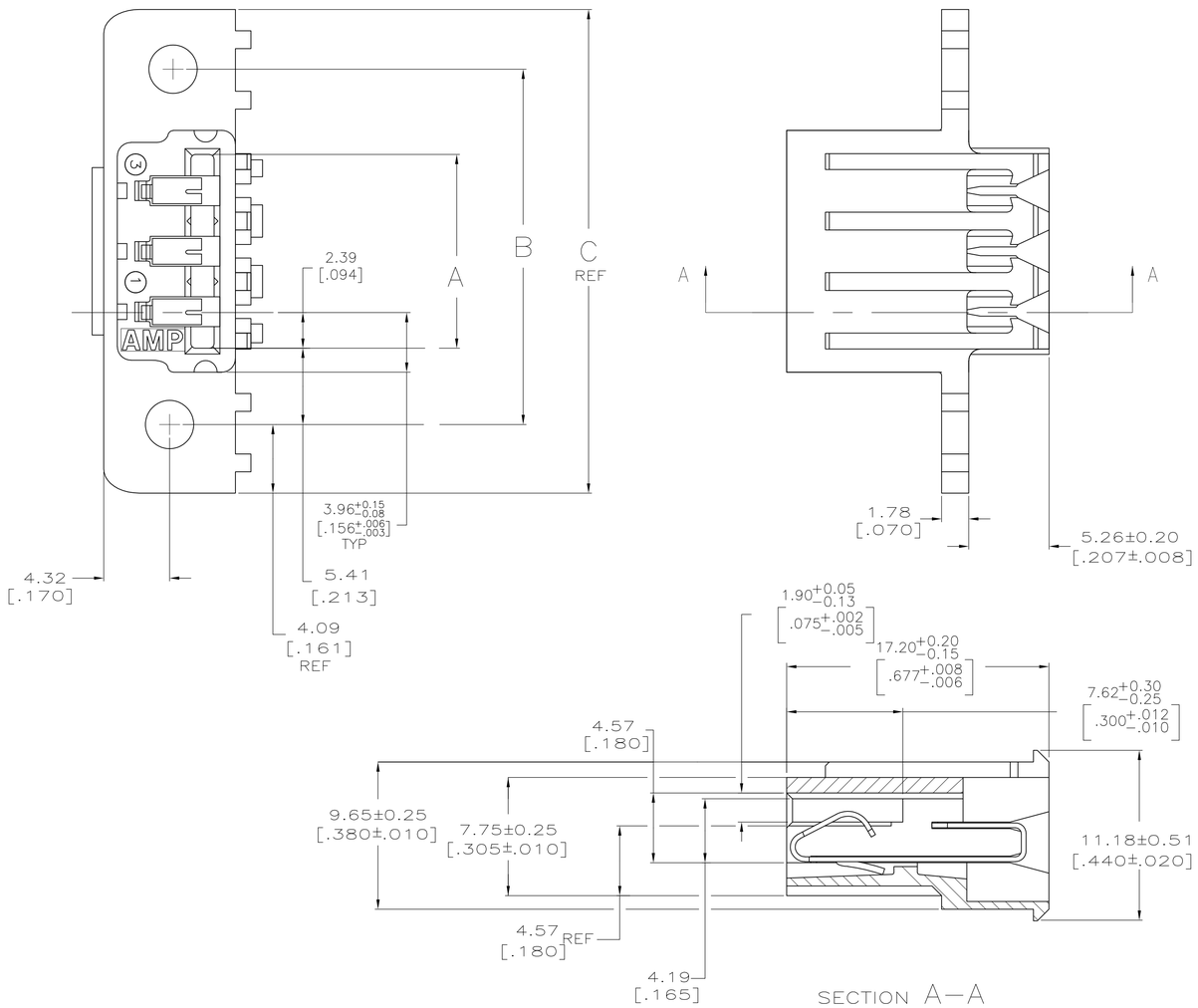

SECTION A-A

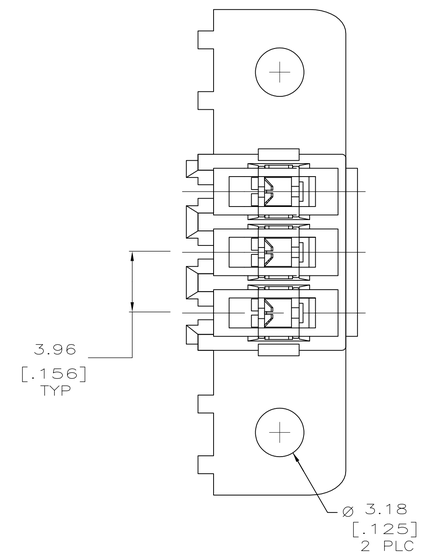

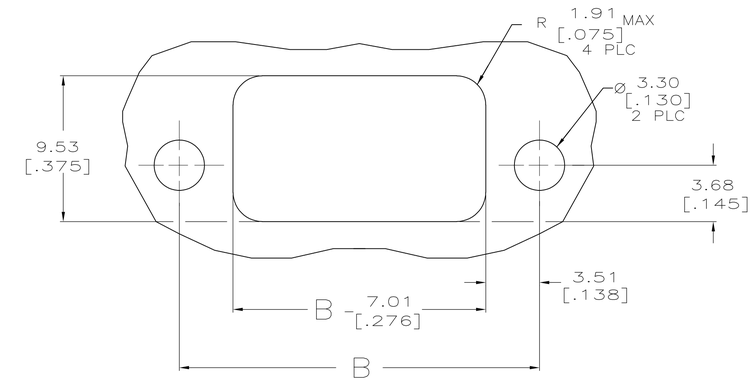

RECOMMENDED PANEL CUTOUT

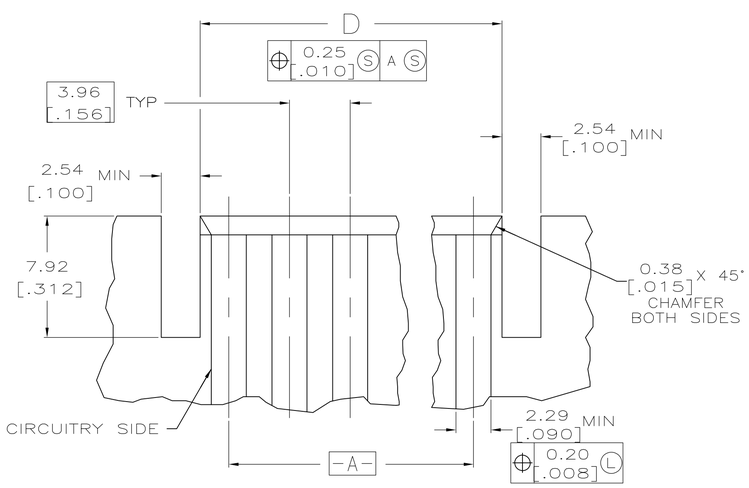

RECOMMENDED P.C. BOARD LAYOUT

	CONTACT FINISH	D	C	B	A	NO. OF CIRCUITS	PART NUMBER
	6	95.50 [3.760]	114.91 [4.524]	106.73 [4.202]	95.91 [3.776]	24	5-640866-4
		91.54 [3.604]	110.95 [4.368]	102.77 [4.046]	91.95 [3.620]	23	5-640866-3
		87.58 [3.448]	106.98 [4.212]	98.81 [3.890]	87.99 [3.464]	22	5-640866-2
		83.62 [3.292]	103.02 [4.056]	94.84 [3.734]	84.02 [3.308]	21	5-640866-1
		79.65 [3.136]	99.06 [3.900]	90.88 [3.578]	80.06 [3.152]	20	5-640866-0
		71.73 [2.824]	91.14 [3.588]	82.96 [3.266]	72.14 [2.840]	18	4-640866-8
		59.84 [2.356]	79.25 [3.120]	71.07 [2.798]	60.25 [2.372]	15	4-640866-5
		47.96 [1.888]	67.36 [2.652]	59.18 [2.330]	48.36 [1.904]	12	4-640866-2
		36.07 [1.420]	55.47 [2.184]	47.29 [1.862]	36.47 [1.436]	9	3-640866-9
		24.18 [.952]	43.59 [1.716]	35.41 [1.394]	24.59 [.968]	6	3-640866-6
		12.29 [.484]	31.70 [1.248]	23.52 [.926]	12.70 [.500]	3	3-640866-3
SUPERSEDED 7	5	95.50 [3.760]	114.91 [4.524]	106.73 [4.202]	95.91 [3.776]	24	2-640866-4
		91.54 [3.604]	110.95 [4.368]	102.77 [4.046]	91.95 [3.620]	23	2-640866-3
		87.58 [3.448]	106.98 [4.212]	98.81 [3.890]	87.99 [3.464]	22	2-640866-2
		83.62 [3.292]	103.02 [4.056]	94.84 [3.734]	84.02 [3.308]	21	2-640866-1
		79.65 [3.136]	99.06 [3.900]	90.88 [3.578]	80.06 [3.152]	20	2-640866-0
		71.73 [2.824]	91.14 [3.588]	82.96 [3.266]	72.14 [2.840]	18	1-640866-8
		59.84 [2.356]	79.25 [3.120]	71.07 [2.798]	60.25 [2.372]	15	1-640866-5
		47.96 [1.888]	67.36 [2.652]	59.18 [2.330]	48.36 [1.904]	12	1-640866-2
		36.07 [1.420]	55.47 [2.184]	47.29 [1.862]	36.47 [1.436]	9	640866-9
		24.18 [.952]	43.59 [1.716]	35.41 [1.394]	24.59 [.968]	6	640866-6
		12.29 [.484]	31.70 [1.248]	23.52 [.926]	12.70 [.500]	3	640866-3

THIS DRAWING IS A CONTROLLED DOCUMENT.

METRIC

DIMENSIONS: mm [INCHES]

TOLERANCES UNLESS OTHERWISE SPECIFIED:
0 PLC ± -
1 PLC ± -
2 PLC ± 0.13 [.005]
3 PLC ± -
4 PLC ± -
ANGLES ± -

MATERIAL: SEE NOTE 1
FINISH: SEE NOTE 1

DWN B. LEWIS 2-20-96
CHK R. SWING 2-20-96
APVD -
PRODUCT SPEC -
APPLICATION SPEC -
WEIGHT -

Tyco Electronics
Tyco Electronics Corporation
Harrisburg, Pa 17105-3608

NAME
MTA-156
CARD EDGE CONNECTOR ASSEMBLY,
22 AWG,PANEL MOUNT

SIZE	CAGE CODE	DRAWING NO	RESTRICTED TO
A1	00779	C-640866	-

CUSTOMER DRAWING | SCALE 5:1 | SHEET 1 OF 1 | REV N1